ASIA PACIFIC INDUSTRY GROUP CO., LIMITED
Tel +0086-551-64687285
Email sales@boppfilmsales.com
www.boppfilmsales.com · www.apigcl.com

Adhesive Labels in Roll or Sheets - Product Photos
不干胶标签 — 产品实拍

Document No. 文件编号	Revision 版本	Issue date 签发日期	Document type 文件类型
APIG-PHOTO-ADH-LABEL-2026	**Rev. 3.0**	**2026-11-10**	**Packing / Product Photo Album /**

1 • DOCUMENT INFORMATION 文档信息

Item 项目	Description 说明
Document type 文件类型	Packing / Product Photo Album / 包装 / 产品相册
Subject 主题	Adhesive Labels in Roll or Sheets - Product Photos
Specification basis 规格依据	APIG product specification 亚太工业集团产品规格
Issue 签发	2026-11-10 · Rev. 3.0
Language 语言	Bilingual headings — English / 中文

2 • TECHNICAL CONTENT 技术内容

Product / packing view 1 产品 / 包装实拍 1

Product / packing view 2 产品 / 包装实拍 2

Photos of Labels · · · · · · · · · · · · · · · · ·

以下数据为本产品技术规格，随货签发检验记录。

3 • NOTES 说明

This document states the standard specification of the product. Values apply to the grades listed here; the tolerance range agreed in the order confirmation and the technical agreement prevails for any specific order. Batch test records are issued with the goods on request.

PHOTOS 实拍图片



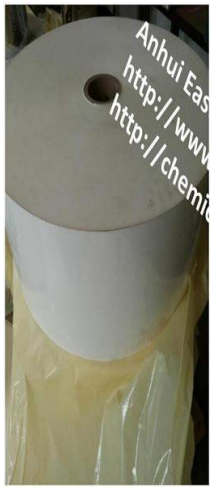



地址 ADD.: No.3399, Luzhou Ave., Baohe Dist., Hefei, Anhui 230051, China | 安徽省合肥市包河区庐州大道3399号
传真 Fax: +0086-551-64683490 **营业执照注册号 Business License Reg. No.:** 91340100575703313N
海关注册编码 Customs Reg. Code: 3401961393

ASIA PACIFIC INDUSTRY GROUP CO., LIMITED
Tel +0086-551-64687285
Email sales@boppfilmsales.com
www.boppfilmsales.com · www.apigcl.com







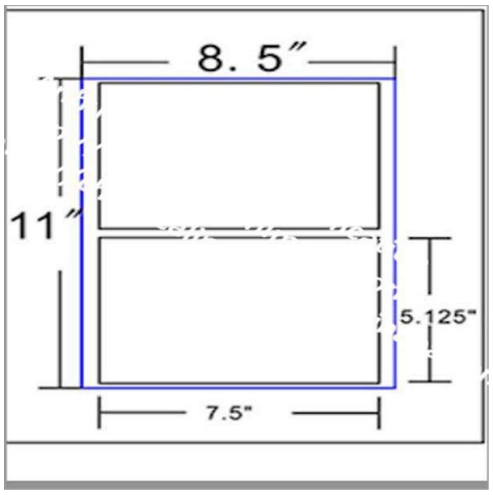

Product / packing views 1-6

ASIA PACIFIC INDUSTRY GROUP CO., LIMITED
Tel +0086-551-64687285
Email sales@boppfilmsales.com
www.boppfilmsales.com · www.apigcl.com



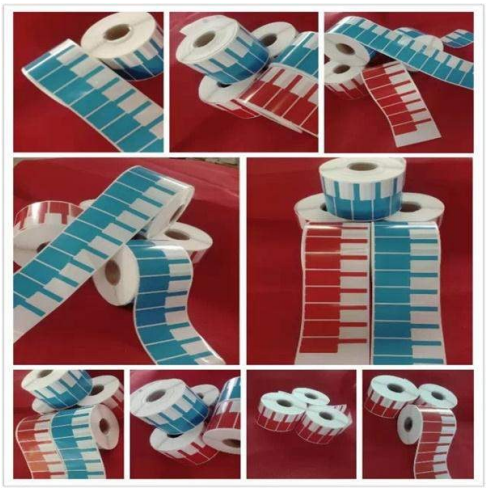



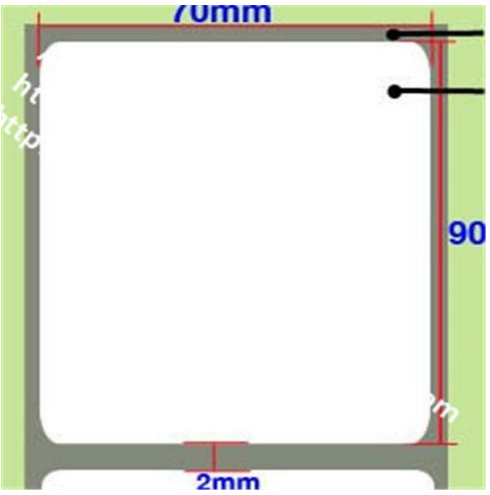

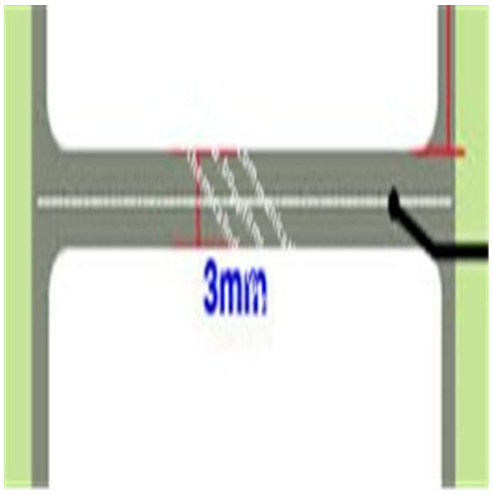



Product / packing views 7-12

ASIA PACIFIC INDUSTRY GROUP CO., LIMITED
Tel +0086-551-64687285
Email sales@boppfilmsales.com
www.boppfilmsales.com · www.apigcl.com









Product / packing views 13-16